FIGURE 1
TYPICAL MANHOLE DETAIL - TYPE A

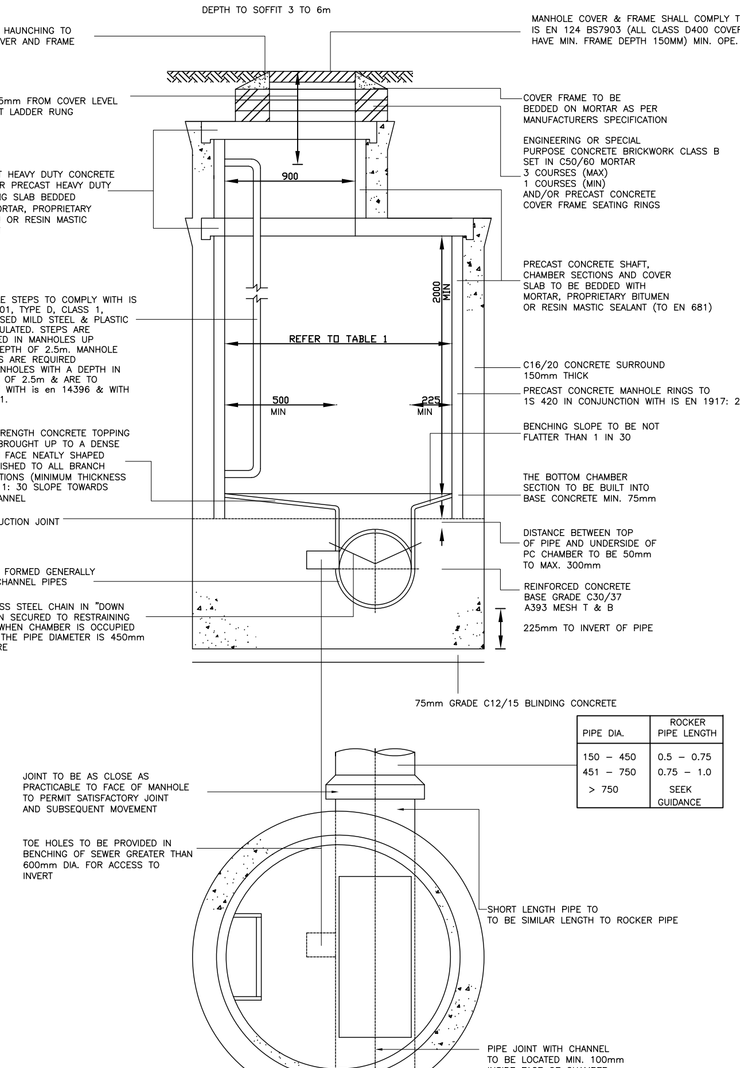

PIPE DIA.	ROCKER PIPE LENGTH
150 – 450	0.5 – 0.75
451 – 750	0.75 – 1.0
> 750	SEEK GUIDANCE

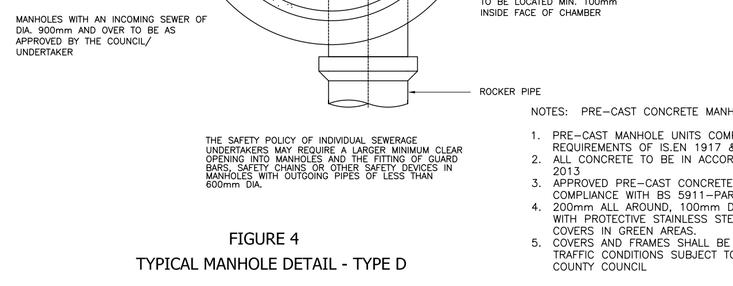

NOTES: PRE-CAST CONCRETE MANHOLE

1. PRE-CAST MANHOLE UNITS COMPLYING WITH REQUIREMENTS OF IS.EN 1917 & BS 5911-PART 3.
2. ALL CONCRETE TO BE IN ACCORDANCE WITH IS EN 206: 2013
3. APPROVED PRE-CAST CONCRETE ROOF SLABS TO BE IN COMPLIANCE WITH BS 5911-PART 4:
4. 200mm ALL AROUND, 100mm DEEP CONCRETE PLINTH WITH PROTECTIVE STAINLESS STEEL METAL BAND AROUND COVERS IN GREEN AREAS.
5. COVERS AND FRAMES SHALL BE SUITABLE FOR ROAD AND TRAFFIC CONDITIONS SUBJECT TO APPROVAL WITH LOCAL COUNTY COUNCIL

FIGURE 2
TYPICAL MANHOLE DETAIL - TYPE B

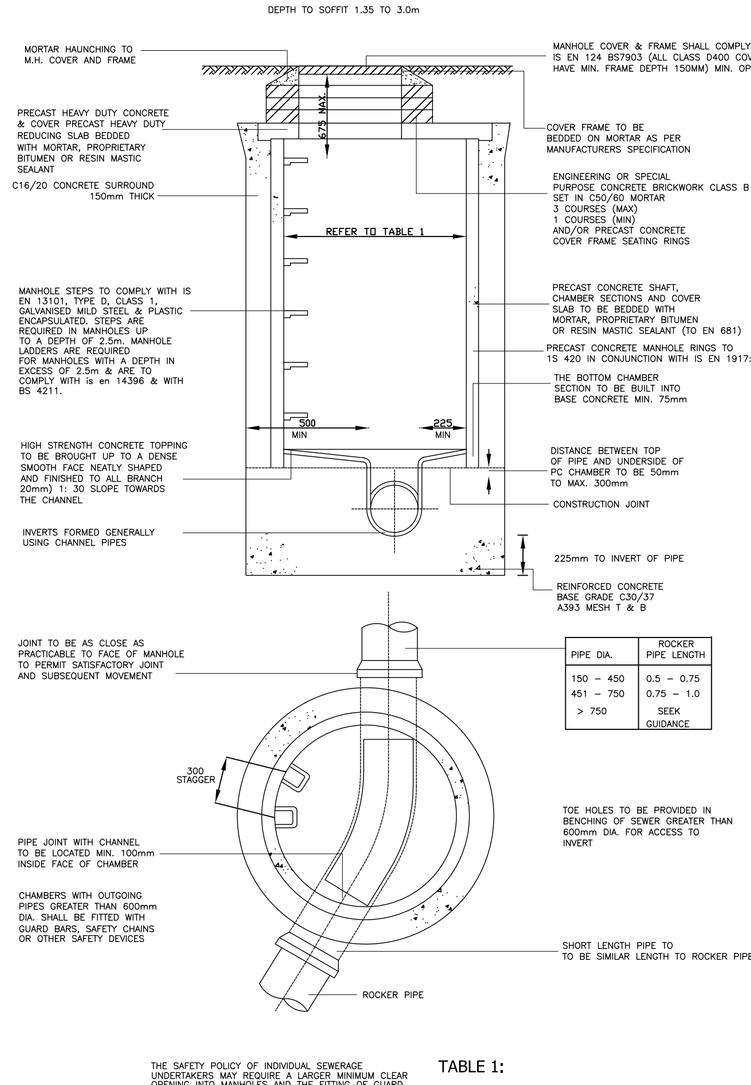

PIPE DIA.	ROCKER PIPE LENGTH
150 – 450	0.5 – 0.75
451 – 750	0.75 – 1.0
> 750	SEEK GUIDANCE

TABLE 1:

DIAMETER OF LARGEST PIPE IN MANHOLE (mm)	CHAMBER SECTION DIAMETER (mm)
LESS THAN 375mm	1200
375 – 450	1350
500 – 700	1500
750 – 900	1800

FIGURE 3
TYPICAL MANHOLE DETAIL - TYPE C

AGREEMENT OF COUNCIL/UNDERTAKER MUST BE GIVEN BEFORE INSTALLATION OF THIS TYPE OF MANHOLE

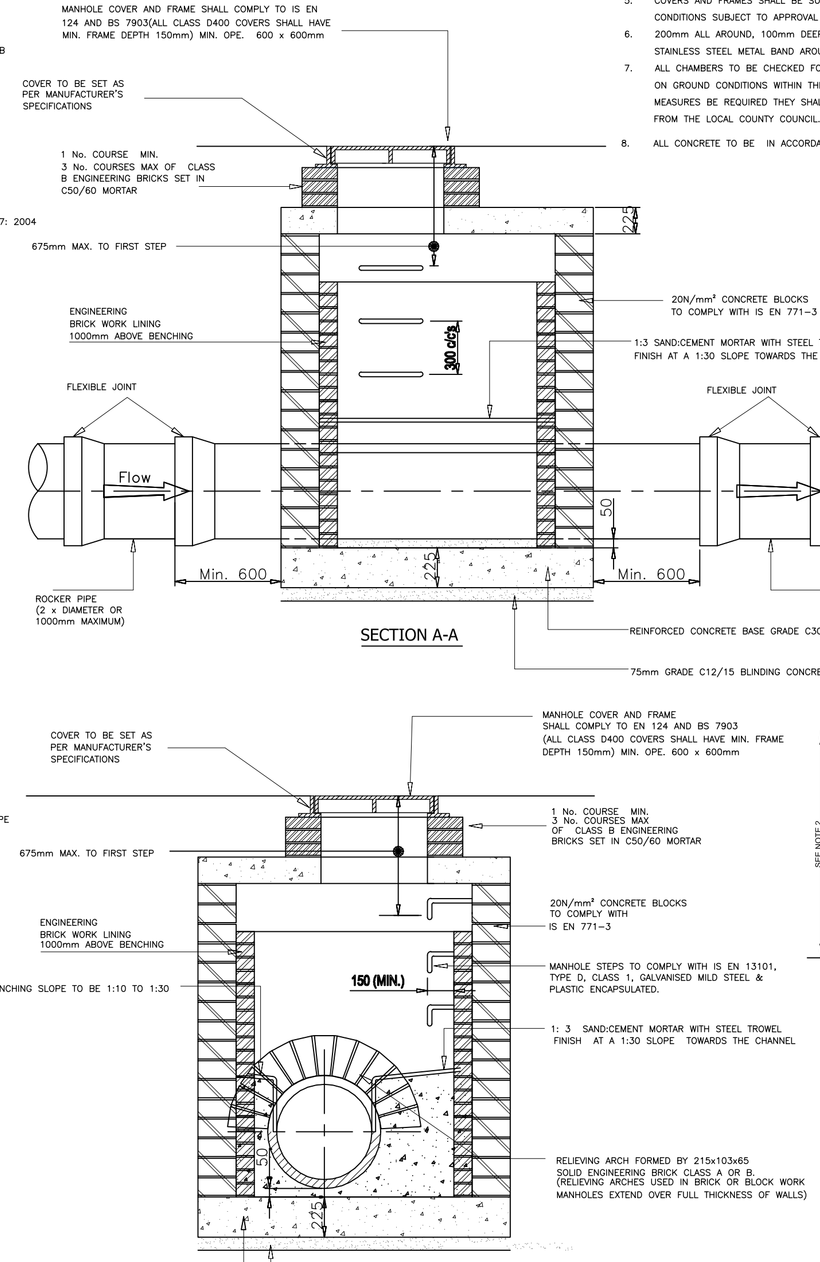

SECTION A-A

SECTION B-B

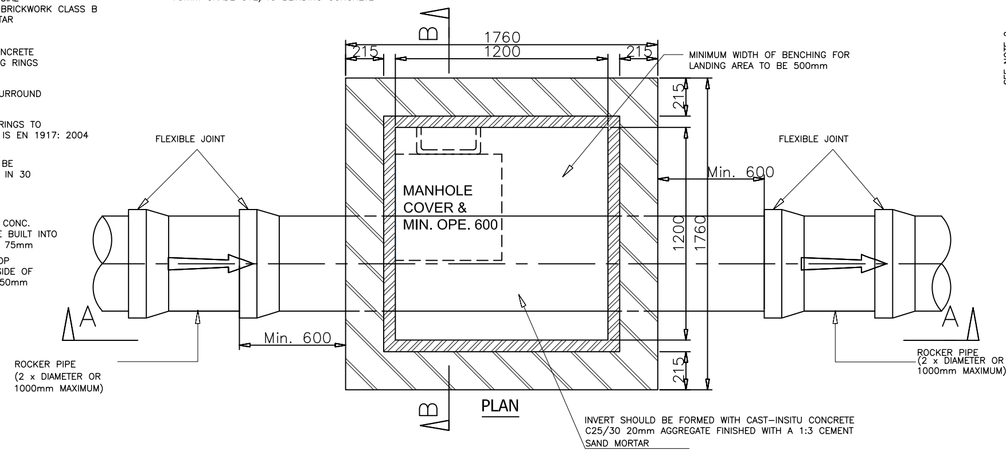

PLAN

NOTES: BLOCKWORK MANHOLES

1. SOLID BLOCKWORK TO BE OF HIGH STRENGTH (20N/mm²) TO IS EN 771.
2. MAXIMUM DEPTH OF BLOCK WORK MANHOLE IS 1.20m
3. WALLS TO BE FLUSH POINTED AND NOT PLASTERED INTERNALLY, INTERNAL LINING OF ENGINEERING BRICK TO IS EN 771-1 TO A HEIGHT OF 1m ABOVE BENCHING. ENGINEERING BRICK TO BE BONDED TO BLOCKWORK USING ENGLISH GARDEN WALL BOND.
4. APPROVED PRE-CAST CONCRETE ROOF SLABS TO BE IN COMPLIANCE WITH BS 5911-PART 4:
5. COVERS AND FRAMES SHALL BE SUITABLE FOR ROAD AND TRAFFIC CONDITIONS SUBJECT TO APPROVAL FROM THE LOCAL COUNTY COUNCIL
6. 200mm ALL AROUND, 100mm DEEP CONCRETE PLINTH WITH PROTECTIVE STAINLESS STEEL METAL BAND AROUND COVERS IN GREEN AREAS.
7. ALL CHAMBERS TO BE CHECKED FOR UPLIFT BY THE DEVELOPER BASED ON GROUND CONDITIONS WITHIN THE SITE. SHOULD ANTI FLOATATION MEASURES BE REQUIRED THEY SHALL BE SUBJECT TO APPROVAL FROM THE LOCAL COUNTY COUNCIL.
8. ALL CONCRETE TO BE IN ACCORDANCE WITH IS EN 206 : 2013.

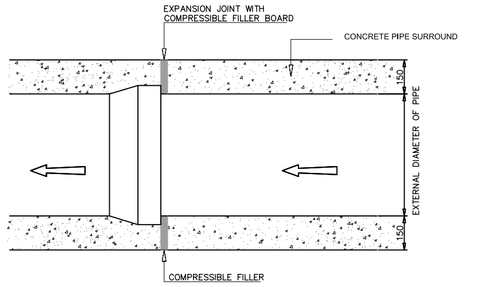

SPIGOT & SOCKET JOINT

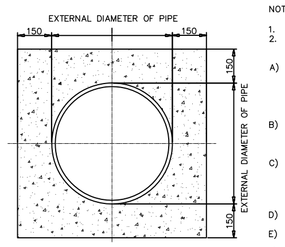

DETAIL 1

NOTES: TRENCH BACKFILL & BEDDING DETAILS

1. ALL DIMENSIONS ARE IN MILLIMETRES (mm) UNLESS NOTED OTHERWISE.
2. THE MINIMUM DEPTH OF COVER FROM THE FINISHED SURFACE TO THE CROWN OF GRAVITY PIPES WITHOUT PROTECTION SHOULD BE AS FOLLOWS:
   A) GARDENS AND PATHWAYS WITHOUT ANY POSSIBILITY OF VEHICULAR ACCESS – DEPTH NOT LESS THAN 0.5 M. (THIS WOULD NORMALLY RELATE TO DRAINS IN PRIVATE PROPERTY, SHALLOW PIPES OF THIS NATURE ARE UNDESIRABLE AND SHOULD BE INSTALLED IN ACCORDANCE WITH THE CURRENT BUILDING REGULATIONS).
   B) DRIVEWAYS, PARKING AREAS WITH HEIGHT RESTRICTIONS TO PREVENT ENTRY BY VEHICLES WITH A GROSS VEHICLE WEIGHT IN EXCESS OF 7.5 TONNES – DEPTH NOT LESS THAN 0.75 M.
   C) DRIVEWAYS, PARKING AREAS AND NARROW STREETS WITHOUT FOOTWAYS (E.G. MEWS DEVELOPMENTS) WITH LIMITED ACCESS FOR VEHICLES WITH A GROSS VEHICLE WEIGHT IN EXCESS OF 7.5 TONNES – DEPTH NOT LESS THAN 0.9M.
   D) DEPTHS OF SEWERS IN GATED ESTATES SHALL BE SIMILAR TO THAT OUTLINED ABOVE.
   E) AGRICULTURAL LAND AND PUBLIC OPEN SPACE – DEPTH NOT LESS THAN 0.9 M
   F) OTHER HIGHWAYS AND PARKING AREAS WITH UNRESTRICTED ACCESS TO VEHICLES WITH A GROSS VEHICLE WEIGHT IN EXCESS OF 7.5 TONNES – DEPTH NOT LESS THAN 1.2m.
3. CLAUSE 808 MATERIAL IN ACCORDANCE WITH THE NATIONAL ROADS AUTHORITY SPECIFICATION FOR ROAD WORKS IS TO BE USED AS BACKFILL MATERIAL WHERE THE SEWER MAIN IS LOCATED IN ROADS, FOOTPATHS OR WHEN THE NEAREST PART OF THE TRENCH IS WITHIN 1.0m OF THE EDGE OF THE ROADWAY. CLAUSE 808 IS TO BE COMPACTED AS PER CLAUSE 802 OF THE NATIONAL ROADS AUTHORITY SPECIFICATION FOR ROAD WORKS.
4. SELECTED EXCAVATED MATERIAL MAY BE USED IN GREEN-FIELD AREAS ABOVE GRANULAR PIPE SURROUND MATERIAL SUBJECT TO THE LOCAL COUNTY COUNCIL.
5. PIPE BEDDING SHALL COMPLY WITH WS 4-08-02 AND IGN 4-08-01 GRANULAR MATERIAL SHALL BE 14mm TO 5mm GRADED AGGREGATE OR 10mm SINGLE SIZED AGGREGATE IS EN 13242. CONCRETE BED, HAUNCH & SURROUND, WHERE REQUIRED SHALL BE TO DETAIL 1.
6. IN SOFT GROUND CONDITIONS (CBR < 5) THE MATERIAL SHOULD BE EXCAVATED AND DISPOSED OF IN ACCORDANCE WITH THE WASTE MANAGEMENT ACT AND CLAUSE 808 MATERIAL IN ACCORDANCE WITH THE NATIONAL ROADS AUTHORITY SPECIFICATION FOR ROAD WORKS SHALL REPLACE THE EXCAVATED MATERIAL. WRAPPED IN GEO-TEXTILE WRAPPING. ALTERNATIVELY, SPECIAL SUPPORT MAY NEED TO BE CONSIDERED.
7. IN GREEN FIELD AREAS, TYPE B BACKFILL (SELECTED EXCAVATED MATERIAL) WILL BE ALLOWED ABOVE THE SIDE HAUNCH GRANULAR MATERIAL IN THE CASE OF RIGID PIPES. A GRANULAR SURROUND OF A MINIMUM DEPTH OF 150mm ABOVE THE CROWN OF THE PIPE IS REQUIRED FOR FLEXIBLE PIPES , AND TYPE B MATERIAL MAY BE USED AS BACKFILL ABOVE THIS. ALL RISING MAINS IN GREENFIELD AREAS SHALL HAVE A MINIMUM COVER OF 300mm OF GRANULAR MATERIAL ABOVE THE EXTERNAL CROWN OF THE PIPE.
8. NON DEGRADABLE MARKER TAPE SHOULD BE INSTALLED AT TOP OF PIPE BEDDING LAYER.
9. TRENCH WIDTHS FOR PIPE SIZES <=80mm MAY BE <500mm, SUBJECT TO CONSIDERATION BEING GIVEN TO THE TRENCH DEPTH, HEALTH & SAFETY & CONSTRUCTION ACCESS REQUIREMENTS.
10. CONCRETE PIPE BEDS AND HAUNCHES MAY BE REQUIRED TO ADDRESS MINIMUM COVER SITUATIONS, AND SHALL BE SUBJECT TO SUBMISSION AND ASSESSMENT BY IRISH WATER BEFORE ADVANCING WITH THE WORKS.
11. CONCRETE PIPE BEDS AND HAUNCHES SHALL HAVE A MINIMUM THICKNESS OF 150mm WITH AN ABSOLUTE MINIMUM DEPTH OF COVER ABOVE THE EXTERNAL CROWN OF THE PIPE OF 750mm.
12. CONCRETE TO BE IN ACCORDANCE WITH IS EN 206 AND TO BE CLASS C16/20.
13. THE HAUNCHES AND SURROUNDS TO BE FORMED USING FORM WORK TO PROVIDE A ROUGH CAST FINISH.
14. EXPANSION JOINTS IN THE CONCRETE SHALL BE PROVIDED AT ALL PIPE JOINTS TO ALLOW FOR PIPE FLEXIBILITY, COMPRESSIBLE FILLER BOARD TO BE IN ACCORDANCE WITH BS EN 622-1 AND BS EN 622-4 AND TO BE 18mm THICK
15. POLYETHYLENE PIPES SHALL BE WRAPPED IN PLASTIC SHEETING HAVING A COMPOSITION IN ACCORDANCE WITH BS 6076 BEFORE BEING CASTC INTO CONCRETE.
16. BITUMINOUS MATERIAL SHALL NOT BE PUT IN CONTACT WITH PE OR PVC PIPES

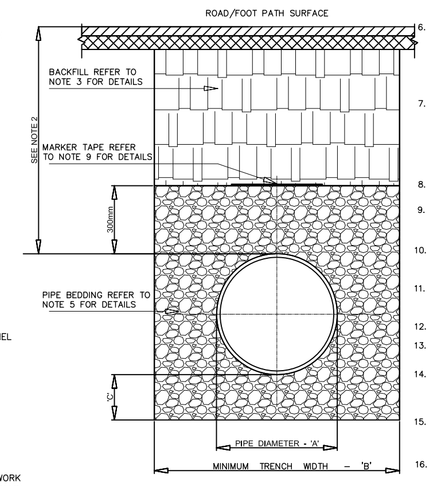

CROSS SECTION IN ROADS

FIGURE 4
TYPICAL MANHOLE DETAIL - TYPE D

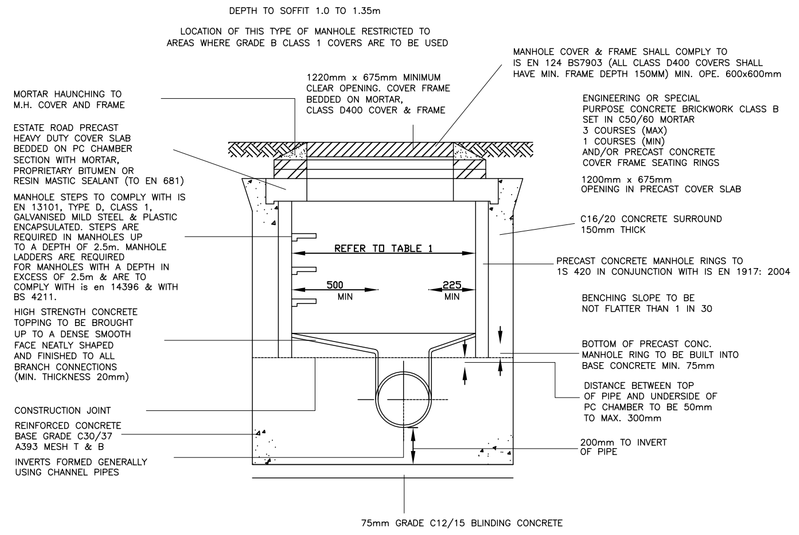

FIGURE 5
TYPICAL MANHOLE DETAIL - TYPE E

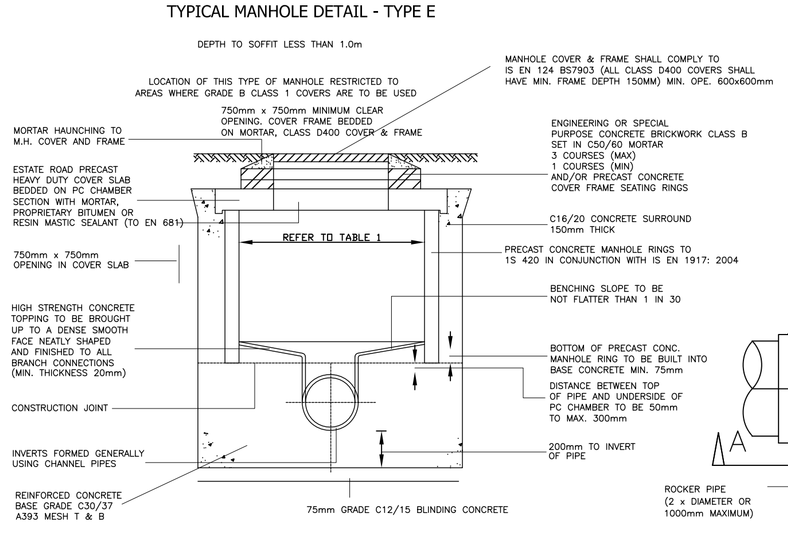

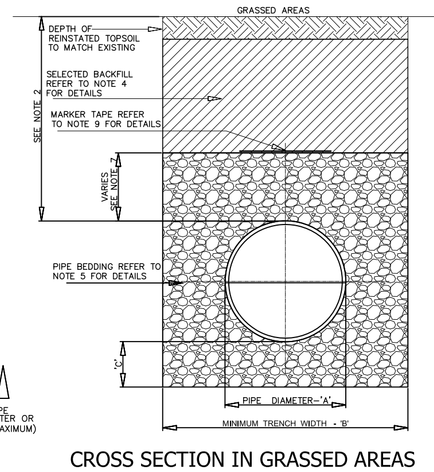

CROSS SECTION IN GRASSED AREAS

PIPE DIAMETER 'A' (mm)	TRENCH WIDTH
≤ 80 RISING MAIN	SEE NOTE 10.
100	500
150	600
200	600
250	750
300	750
350	750
400	900
450	900

PIPE DIAMETER 'A' (mm)	DEPTH OF BEDDING 'C' (mm)
≤100	100
150 - 450	200

ISSUED FOR PLANNING

DIMENSIONS

Figured dimensions only to be taken from this drawing.
All dimensions to be checked on site.
Architects to be informed immediately of any discrepancies before work proceeds.

© COPYRIGHT

This drawing and any design hereon is copyright of JOR Consulting Engineers and must not be reproduced in whole or in part without their express written consent.

NOTES:

1. ALL DRAINAGE SHALL BE CONSTRUCTED IN ACCORDANCE WITH SOUTH DUBLIN COUNTY COUNCIL SPECIFICATION
2. PRIOR TO LAYING OF PIPES, MANHOLES BASES SHALL BE CAST IN PLACE AND PIPES LAID CONTINUOUSLY THROUGH MANHOLES.
3. WHERE UPVC PIPES ARE ENCASED IN CONCRETE THEY SHALL BE WRAPPED IN 1000g POLYTHENE.
4. FIGURES 1 – 5 SHOW TYPICAL DETAILS OF MANHOLES WITH DEPTHS FROM COVER LEVEL TO SEWER SOFFIT NOT EXCEEDING 6m. NO SIGNIFICANT DEPARTURE FROM THESE SHOULD BE MADE WITHOUT APPROVAL BY THE UNDERTAKER.
5. IN EXCEPTIONAL CASES, WHERE MANHOLES HAVE TO BE CONSTRUCTED AT A GREATER DEPTH THAN 6m, THE DETAILS MUST BE AGREED IN ADVANCE WITH THE COUNCIL/UNDERTAKER
6. CHAMBER DIAMETERS ARE TO BE IN ACCORDANCE WITH TABLE 1
7. THE CHAMBER HEIGHT OF A TYPE A MANHOLE (BENCHING TO SLAB SOFFIT) SHOULD NORMALLY BE 2000mm. WHEN THIS IS IMPRACTICABLE TYPE B MANHOLES ARE PREFERRED SUBJECT TO AN ABSOLUTE MINIMUM CHAMBER HEIGHT OF 900mm.
8. THE SIZES QUOTED ABOVE ARE THE MINIMUM. IF TWO PIPES ENTER THE MANHOLE, THE CHAMBER SIZE MUST BE SUFFICIENT TO ACCOMMODATE ADEQUATE BENCHING. ALL PIPES BUILT INTO THE MANHOLE INVERT SHOULD BE INSTALLED WITH SOFFITS LEVEL.
9. THE DESIGN OF SPECIAL MANHOLES AND OTHER STRUCTURES MUST BE AGREED WITH THE COUNCIL/UNDERTAKER.

REV	DATE	DETAILS
A	07/12/18	ISSUED FOR PLANNING
1	16/11/18	DRAFT ISSUE

jor Joseph O'Reilly
Consulting Civil & Structural Engineers
Tel: 046 9077032 Fax: 046 9077932
Email: mail@jor.ie Web: www.jor.ie
Unit 1, St. Therese's Place, Flowerhill, Navan, Co. Meath

CLIENT
Rockture1 Limited

PROJECT
Proposed Strategic Housing Development at Dunshaughlin East

TITLE
Typical Drainage Details Storm & Foul Sheet 2

SCALE	DATE CREATED	DRAWN BY:	SC
As Shown @ A1	October 2018	CHECKED BY:	MS

JOB No.	DRAWING No.	REV
J18-001	015	A